FEIC

FURUKAWA ELECTRIC GROUP

Optical Cable and Accessory for TV Camera

FURUKAWA ELECTRIC INDUSTRIAL CABLE

Furukawa's Optical Cable and Accessory

"Digital Broadcasting" and "High-Definition TV Broad

Optical composite cable has made remarkable progress. Furukawa's TV Camera Optical Cable and Accessory has advanced ahead of the times.

for TV Camera Supporting

casting"

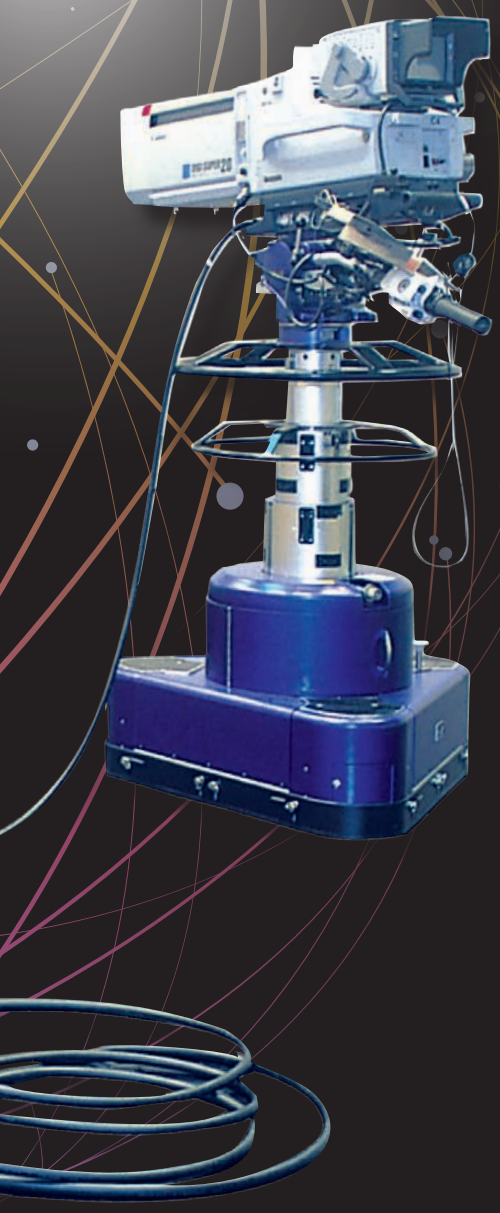

INDEX

*1) ARIB stands for Association of Radio Industries and Businesses.
*2) SMPTE stands for The Society of Motion Picture and Television Engineers.

Optical Cable and Accessory for TV Camera

An installation example of a TV camera cable and accessory in stadium is shown here. Optical composite cables for TV cameras are used to connect different camera positions around the field with the arrayed terminal board on the relay mobile. Employment of an optical cable and accessory for TV camera enables real-time transmission of high-quality information.

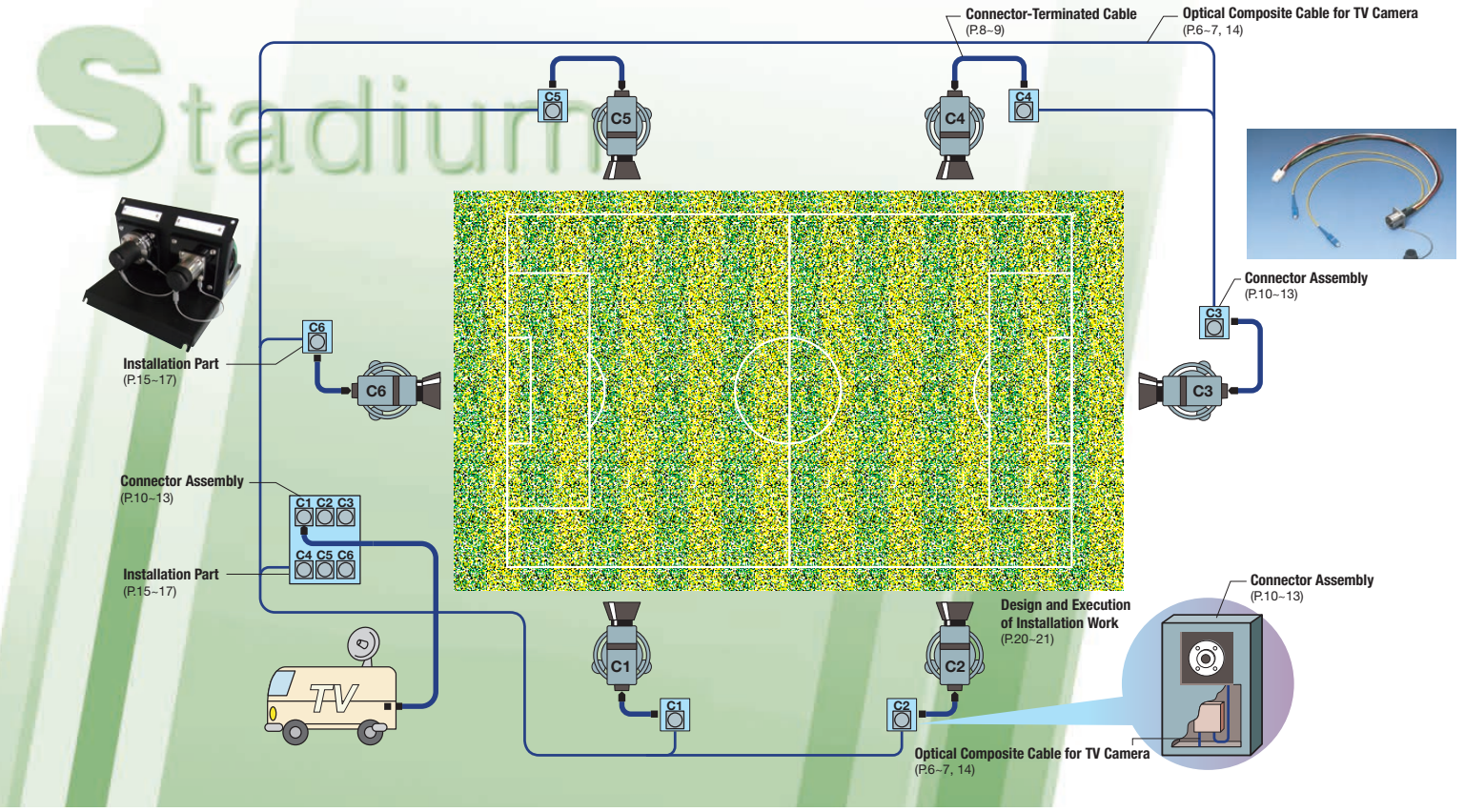

An installation example of a TV camera cable and accessory in a studio is shown here. Camera positions around the studio are connected with the sub control room using optical composite cables for TV camera. When patch panel is provided, all kinds of video images on different channels become available. Employment of an optical cable and accessory for TV camera enables real-time transmission of high-quality information.

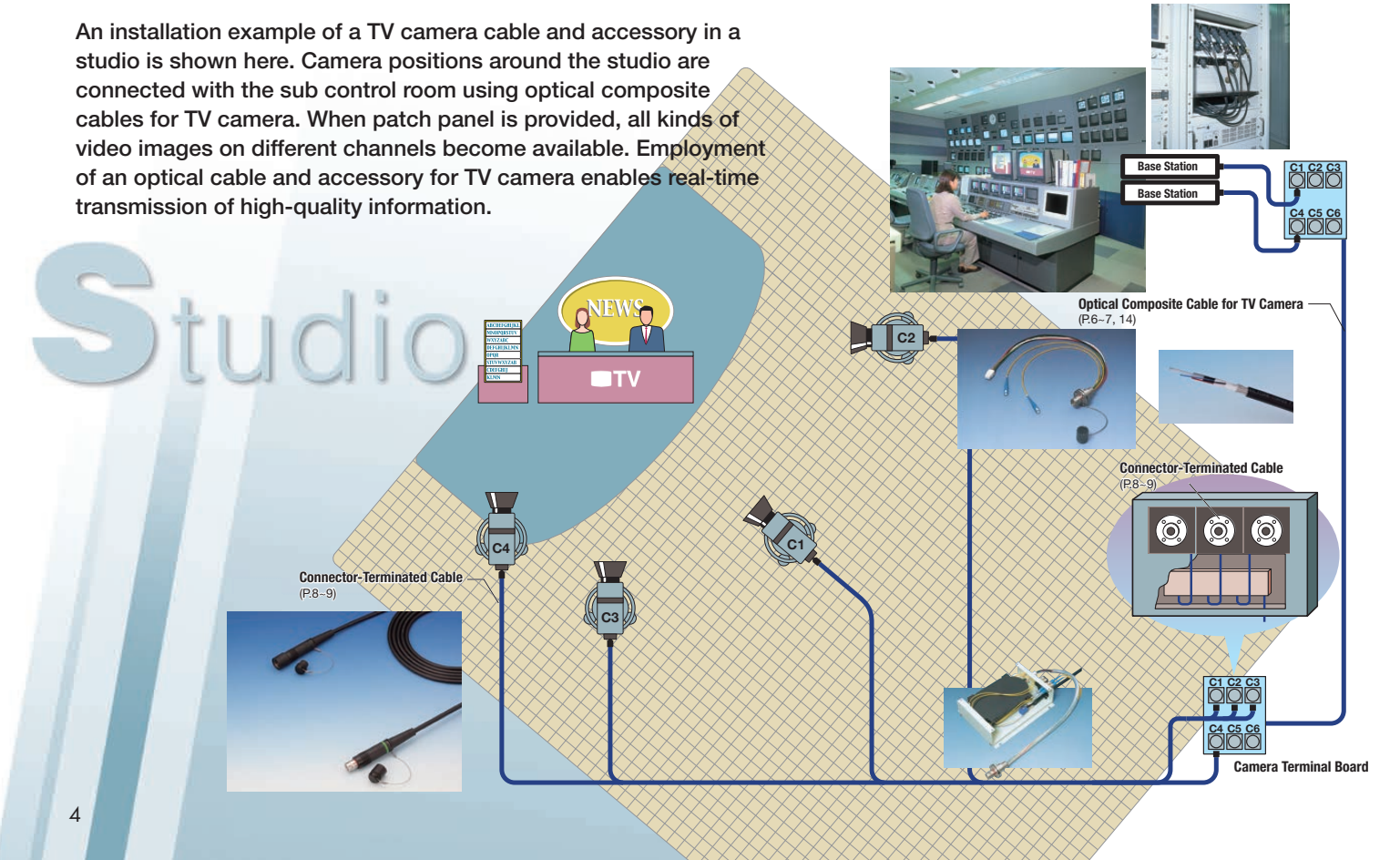

Configuration of Optical Composite Cable for TV Camera

Pattern 1

● Design of the cable with panel mounting connectors.

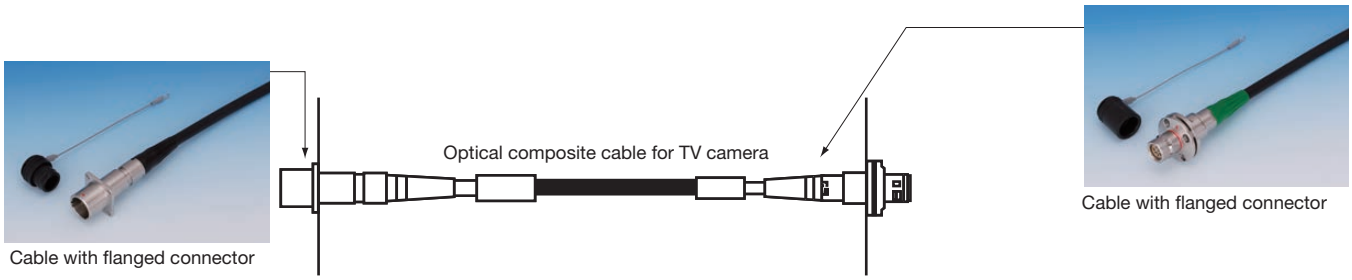

Pattern 2

● Design of the solution with break out connector and JJ adapter.

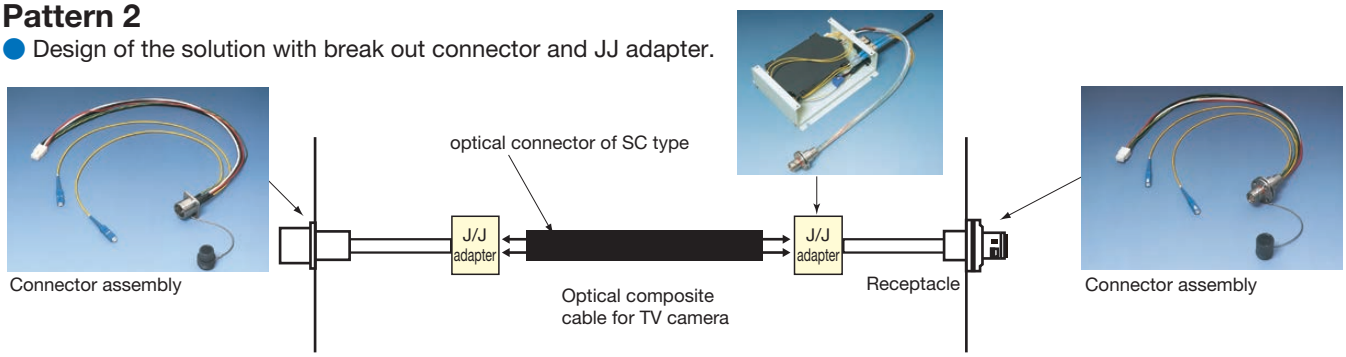

Pattern 3

● Design of the solution by FOP unit or fusion splicing unit.

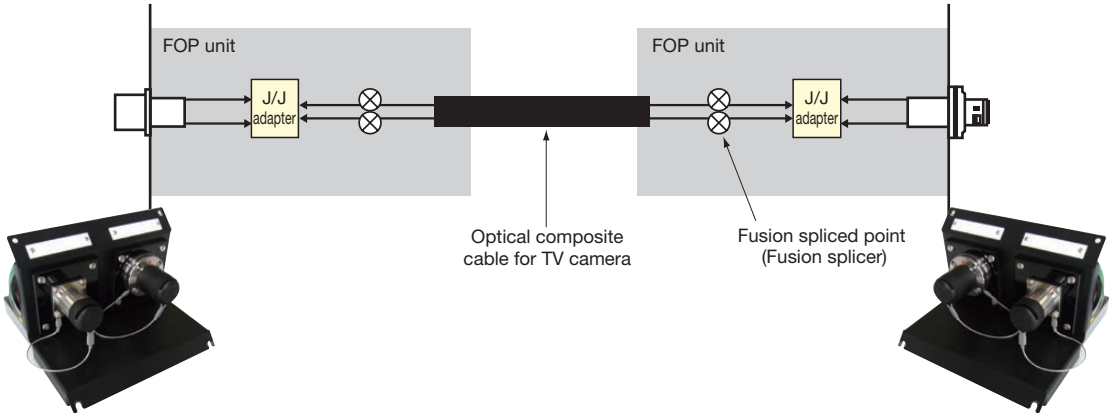

	Pattern1	Pattern2	Pattern3	Remarks
Initial Install cost	○	△	×	
Initial Install time	○	○	△	
Cabling by cable ladder	○	○	○	
Cabling by Free-access floor	○	○	○	
Cabling by cable pipe	×	×	○	
Cabling for short length	○	○	○	It is up to around 30 m
Cabling for long length	×	×	○	
Maintenance cost after install	×	○	○	Easy to change the connector

○ Good △ Fair × Poor

Optical Composite Cable for TV Camera (U.S. Standard: SMPTE)

Type: TV-OM-AMS

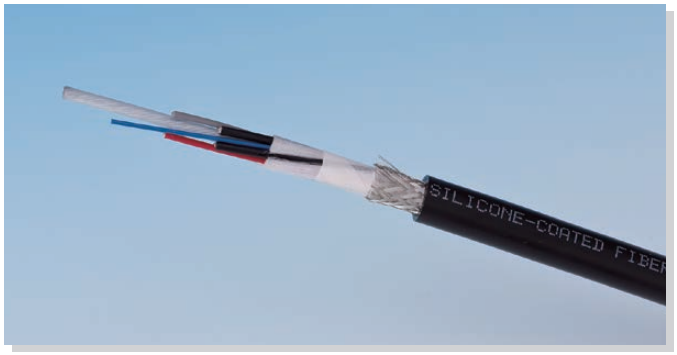

Type: TV-OM-SAMS

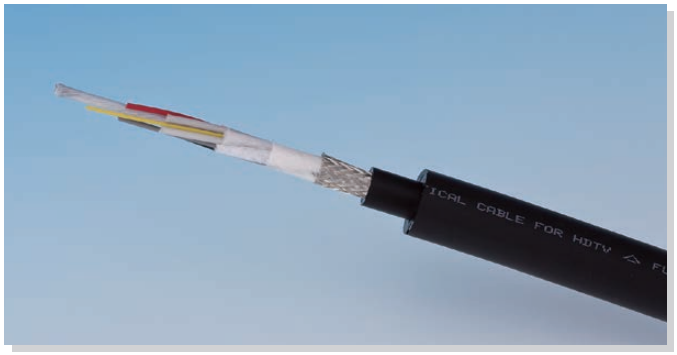

Description

This composite cable integrates power line for TV camera, control line, and optical fiber for video and audio transmission. The cable is standardized by SMPTE as a cable for TV camera.

* The cable diameter can be changed as requested by using a double sheath.

Specifications

●Structure

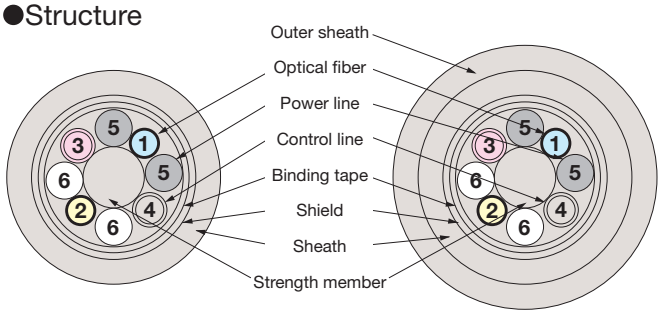

● Optical fiber

Item	Condition	Characteristics	Conversion	
			Condition (km)	Formula
Transmission loss	λ=1.31 μm	0.5 dB/km≥	L ≥ 0.4	0.5 x L dB≥
			L < 0.4	0.5 x 0.4 dB≥

Item	Description
Type of fiber	Single-mode fiber
Mode field diameter	9.0 ± 1 μm
Clad diameter	125 ± 1 μm
Amount of eccentricity	1 μm or less
Cutoff wavelength	1.10~1.35 μm
Coated outside diameter	0.9 ± 0.1 mm

● Power line

Item	Characteristics
Conductor resistance	37. 5 Ω/km
Insulation resistance	10,000 MΩ·km
Withstand voltage	AC1,750 V/1 min.

● Control line

Item	Characteristics
Conductor resistance	113 Ω/km
Insulation resistance	10,000 MΩ·km
Withstand voltage	AC1,750 V/1 min.

*SMPTE stands for The Society of Motion Picture and Television Engineers.

Applications

■ **Multipurpose cable: TV-OM-AMS**

This cable is suitable for wide applications such as fixed installation in facilities, relay cable, handy camera cable and patch cable.

■ **Multipurpose cable: TV-OM-SAMS**

This is a cable for large-sized TV cameras in studios. The cable has a larger outside diameter due to the additional sheath on a multipurpose cable in order not to be jammed between the camera pedestal dolly and the floor in studios.

Core number	Core name	Core color
1	Optical fiber	Blue
2		Yellow
3	Control line	Red
4		Gray
5	Power line	Black
6		White

● Cable (integrated)

Item \ Type		TV-OM-AMS	TV-OM-SAMS
Optical fiber		See Table on the left	
Power line	Conductor	Tin-plated soft copper wire strand (21 wire/0.18 mm)	
	Insulation thickness	0.4 mm nominal	
Control line	Conductor	Tin-plated soft copper wire strand (7 wire/0.203 mm)	
	Insulation thickness	0.33 mm nominal	
Strength member		Steel wire: 1.8 mm Sheath outside diameter: 2.5 mm	
Core stranding		Two cores of optical fiber, four cores of power line and two cores of control line are stranded around a strength member	
Shield		Tin-plated soft copper wire braid	
Sheath (Pb-free)		Abrasion-resistant sheath	Abrasion-resistant sheath (double)
Finished outside diameter		9.2 ± 0.3 mm nominal	16 ± 0.5 mm nominal
Approximate mass		120 kg/km nominal	270 kg/km nominal
Operating temp.		-20°C ~ 75°C	

● Mechanical characteristics

Item	Characteristics
Allowable tension	700 N
Allowable bending radius	Six times the cable outside diameter or larger

*These cables meet SMPTE311M.
(TV-OM-AMS : AWM21480)

Optical Composite Cable for TV Camera (Japan Standard: ARIB)

Type: 2SM-9.2-37.5

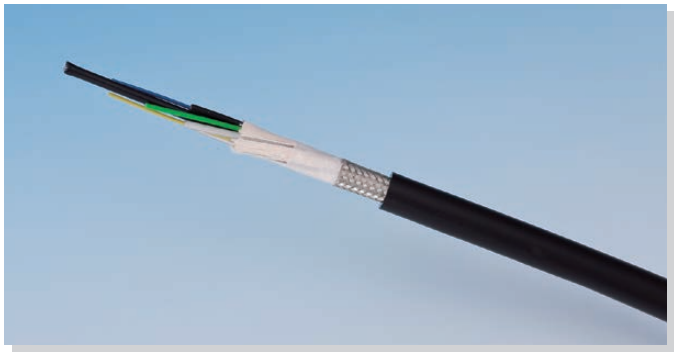

Type: 2SM-16-37.5

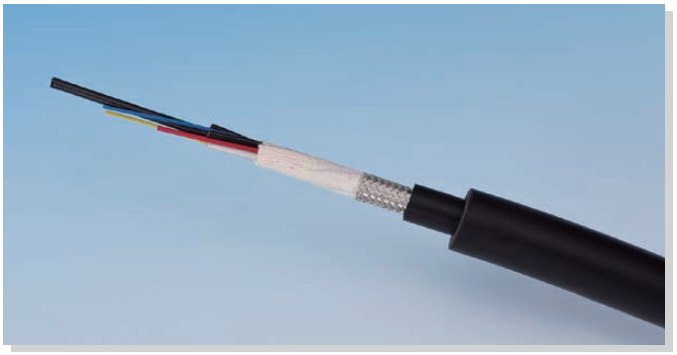

Description

This composite cable integrates power line for TV camera, control line, and optical fiber for video and audio transmission. The cable is standardized by ARIB as a cable for TV camera.

* The cable diameter can be changed as requested by using a double sheath.
* The cable is available in two kinds: mobile cable for use in studios or relay fields; and static cable for use in fixed installation.

Applications

■ **Multipurpose cable: 2SM-9.2-37.5**
This cable is suitable for wide applications such as fixed installation in facilities, relay cable, handy camera cable and patch cable.

■ **Large-camera cable in studio: 2SM-16-37.5**
This is a cable for large-sized TV cameras in studios. The cable has a larger outside diameter due to the additional sheath on a multipurpose cable in order not to be jammed between the camera pedestal dolly and the floor in studios.

Specifications

●Structure

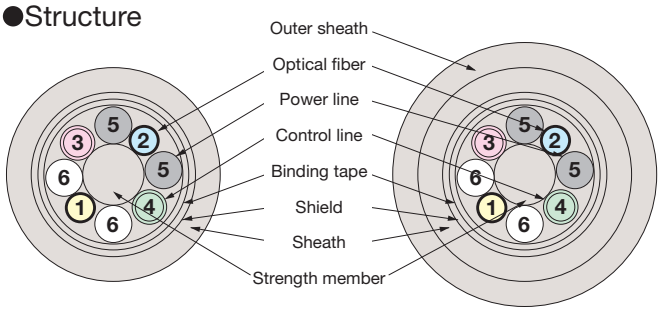

Core number	Core name	Core color
1	Optical fiber	Yellow
2		Blue
3	Control line	Red
4		Green
5	Power line	Black
6		White

● Optical fiber

Item	Condition	Characteristics	Conversion	
			Condition (km)	Formula
Transmission loss	λ=1.31 μm	0.5 dB/km≥	L ≥ 0.4	0.5 x L dB≥
			L < 0.4	0.5 x 0.4 dB≥

Item	Description
Type of fiber	Single-mode silica fiber
Mode field diameter	9.0 ± 1 μm
Clad diameter	125 ± 1 μm
Amount of eccentricity	1 μm or less
Cutoff wavelength	1.10~1.35 μm
Coated outside diameter	0.9 ± 0.1 mm

● Power line

Item	Characteristics
Conductor resistance	37.5 Ω /km
Insulation resistance	10,000 MΩ·km
Withstand voltage	AC1,000 V/1 min.

● Control line

Item	Characteristics
Conductor resistance	113 Ω/km
Insulation resistance	10,000 MΩ·km
Withstand voltage	AC1,000 V/1 min.

*ARIB stands for Association of Radio Industries and Businesses.

● Cable (integrated)

Item \ Type		2SM-9.2-37.5	2SM-16-37.5
Optical fiber		See Table on the left	See Table on the left
Power line	Conductor	Tin-plated soft copper wire strand (21 wire/0.18 mm)	
	Insulation thickness	0.4 mm nominal	
Control line	Conductor	Tin-plated soft copper wire strand (7 wire/0.18 mm)	
	Insulation thickness	0.3 mm nominal	
Strength member		Steel wire: 1.8 mm Sheath outside diameter: 2.5 mm	
Core stranding		Two cores of optical fiber, four cores of power line and two cores of control line are stranded around a strength member	
Shield		Tin-plated soft copper wire braid	
Sheath (Pb-free)		Abrasion-resistant sheath	Abrasion-resistant sheath (double)
Finished outside diameter		9.2 ± 0.3 mm nominal	16.0 ± 0.5 mm nominal
Approximate mass		120 kg/km nominal	270 kg/km nominal
Operating temp.		-20°C ~ 60°C	

Note : ECO specification cables (type EM-) are also available exclusively for fixed installation.

● Mechanical characteristics

Item	Characteristics
Allowable tension	700 N
Allowable bending radius	Six times the cable outside diameter or larger

Connector Assembly

Connector-Terminated Cable

Description This cable assembly connects power lines, control lines, and optical fibers. It should be noted that they are not compatible with each other. Refer to “Selection Table of Connector and Cable” on the next page, since each connector has its own attachable cables.

3K series (ARIB and SMPTE standards)

Multipurpose cable

<Type: FUW-SUS#/AMS****/PUW-SUS※>

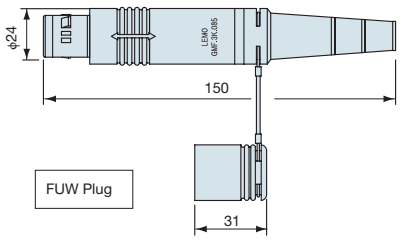

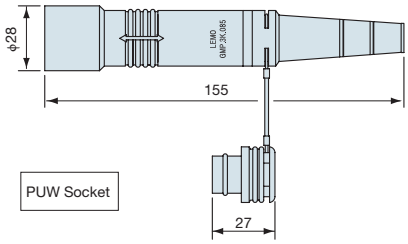

Cable for large-sized studio camera

<Type: FUW-SUS#( )/SAMS****/PUW-SUS※( )>

Stair-like removal of outer sheath is needed for 3K type connector of large-sized studio camera. Please order with the indication of length for removal sheath more than 400 mm.

Customer specified (1) #,※ : Green, Black, Red, Gray, Yellow (Color ring)
(2) **** : Cable length

OPS series

Multipurpose cable

<Type: OPS-P#/AMS****/OPS-J※>

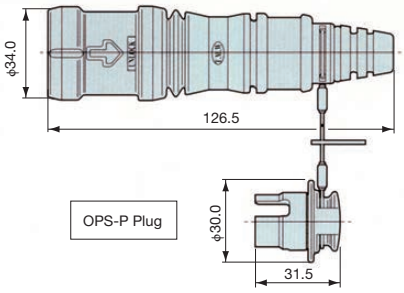

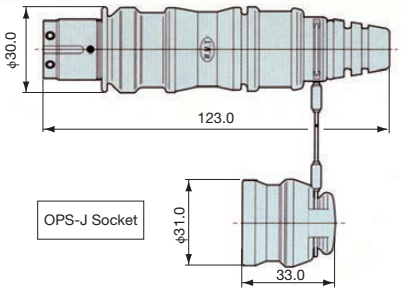

Cable for large-sized studio camera

<Type: OPS-SP#( )/SAMS****/OPS-SJ※>

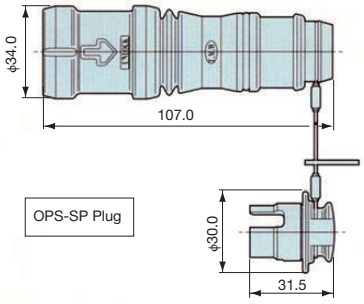

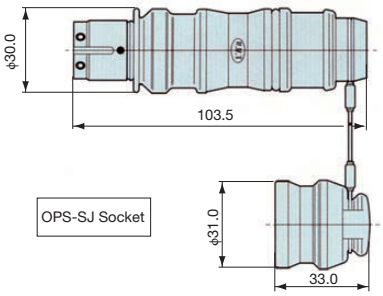

Customer specified (1) #,※ : Green, Black, Red, Gray, Yellow, Blue, Pink, White (Color ring)
(2) **** : Cable length

Connector-Terminated Cable

Connector series for panel mounting

Cable with 3K flanged jack (PBW-SUS)

<Type: PBW-SUS>

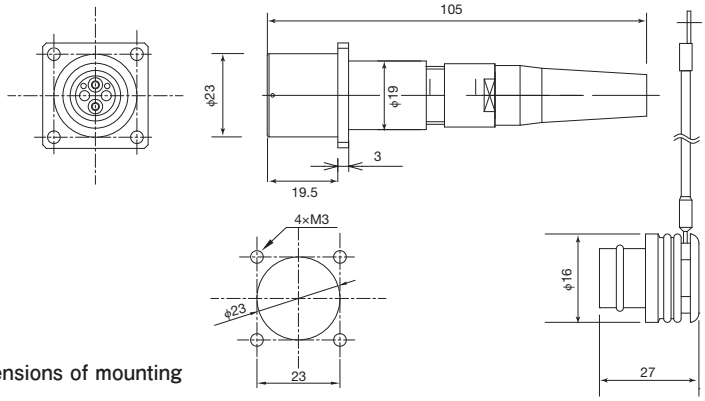

Dimensions of mounting

Cable with 3K flanged plug (FMW-SUS)

<Type: FMW-SUS>

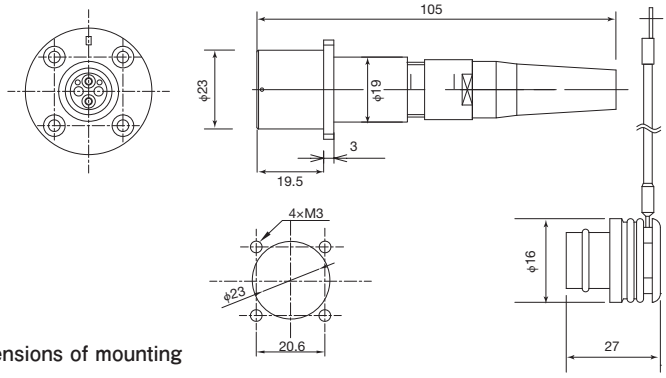

Dimensions of mounting

Cable with OPS flanged jack (OPS-PJ)

<Type: OPS-PJ>

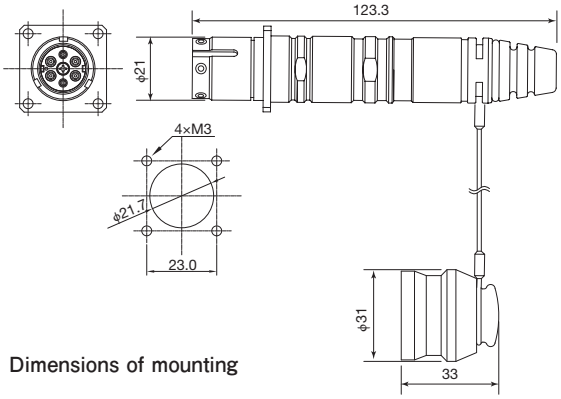

Dimensions of mounting

Cable with OPS flanged plug (OPS-PP)

<Type: OPS-PP>

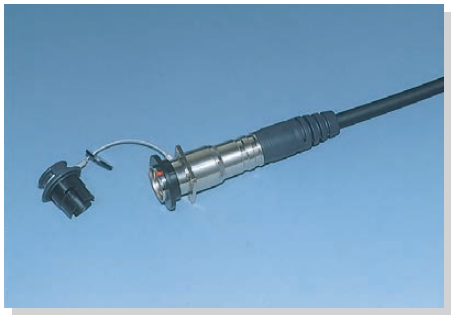

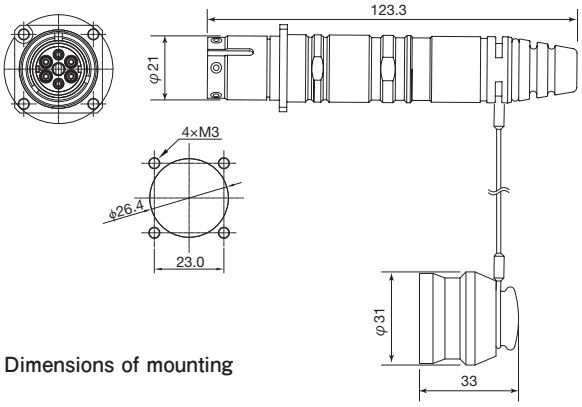

Dimensions of mounting

Connector Assembly

● Selection Table of Connector and Cable

Attachable cable	Product number
2SM-9.2-37.5 **2SM-16-37.5** **TV-OM-AMS** **TV-OM-SAMS**	(LEMO 3K series connector) Plug connector, FUW-SUS Socket connector, PUW-SUS Panel plug connector, FMW-SUS Panel socket connector, PBW-SUS (TAJIMI OPS series connector) Plug connector, OPS-P Jack connector, OPS-J Panel plug connector, OPS-PP Panel jack connector, OPS-PJ

Conversion Connector Series

Description

Every series of 3K, OPS connectors are not interchangeable. Conversion connectors are needed where different series connectors are used for the camera head and panel plug receptacles.

Conversion Cable Series

3K ⟷ OPS

Type

FUW-SUS#/AMS****/OPS-J※

PUW-SUS※ /AMS****/OPS-P#

Note: When ordering, specify the following in the type number.
#: Color of ring for the plug side, i.e. G for green or R for red.
※ Color of ring for the jack side, i.e. K for black or N for gray.
****: Length in meter, like 0050 for 50m.

FUW-SUS#/AMS**/OPS-J※**

PUW-SUS※ /AMS**/OPS-P#**

3K and 5K series are products of LEMO S.A. in Switzerland; and OPS series are products of TAJIMI ELECTRONICS CO., LTD. in Japan.
ARIB stands for Association of Radio Industries and Businesses.
SMPTE stands for The Society of Motion Picture and Television Engineers.

Cable with other connectors

SC-cord cable

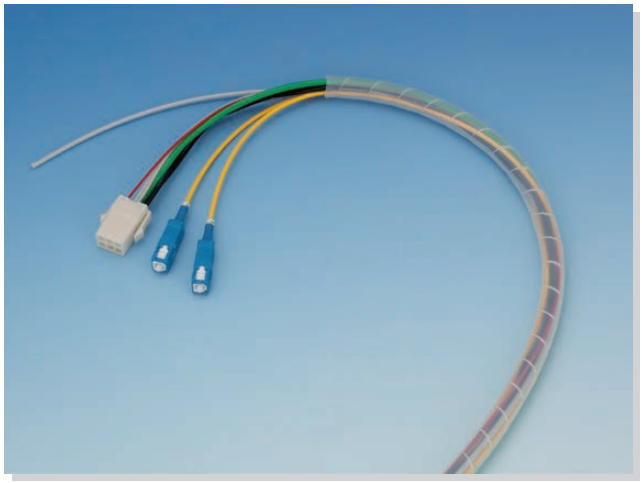

LC-cord cable

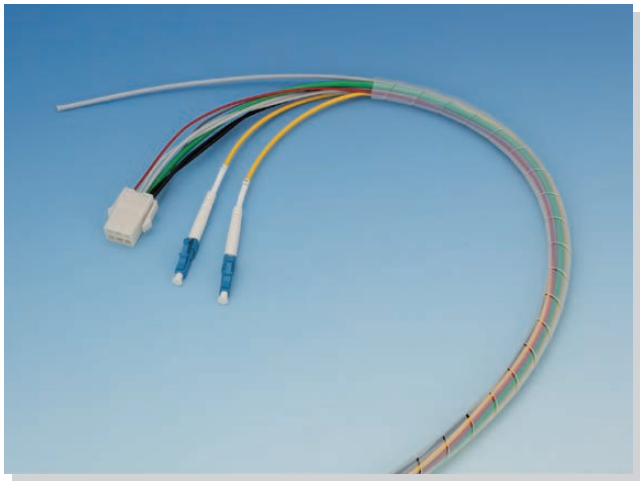

SC-connector

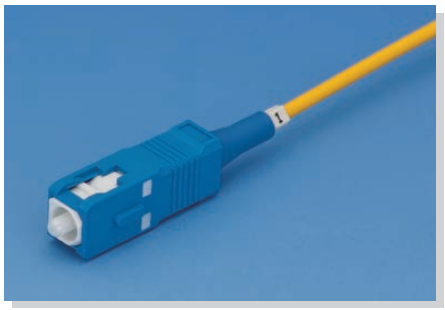

ST-connector

LC-connector

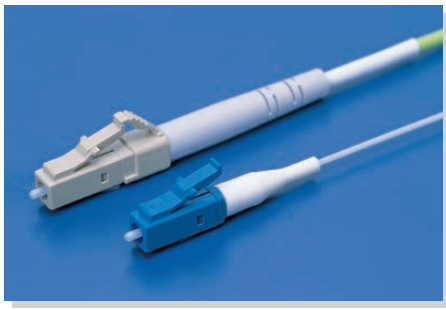

Optical characteristics of polished connectors

		SC connector (IEC61754-4)		FC connector (IEC61754-13)		ST connector (IEC60874-10)		LC connector (IEC61754-20)	
	Type of fiber	GI	SM	GI	SM	GI	SM	GI	SM
Transmission loss (in dB, not more than)	PC polished	0.3	0.5	0.3	0.5	0.5	0.5	0.5	0.5
	SPC polished	—	0.5	—	0.5	—	0.5	0.5	0.5
Reflection loss (in dB, not more than)	PC polished	25	25	25	25	25	25	25	25
	SPC polished	—	40	—	40	—	40	40	40

Type of ferrule polishing

Type	Name of polishing	Reflection loss (dB)
Flat polishing	Flat	Approx. 14
Spherical polishing	Physical contact	25 ~ 40
	Super physical contact	40 ~ 55
Angled polishing	Angled physical contact	60 ~

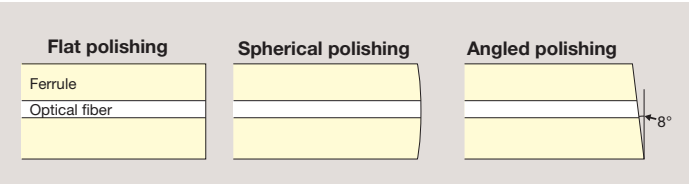

Connector Assembly

Receptacle

Description

These connectors are to be placed on the camera head side of the cable seen from the base station. It should be noted that every series of connectors are not compatible with each other. Pigtail cords are generally provided with SC connectors and the like for maintenance consideration i.e exchanging components.

● 3K series (ARIB and SMPTE standards)
<Type: EDW-SUS/##/**>**

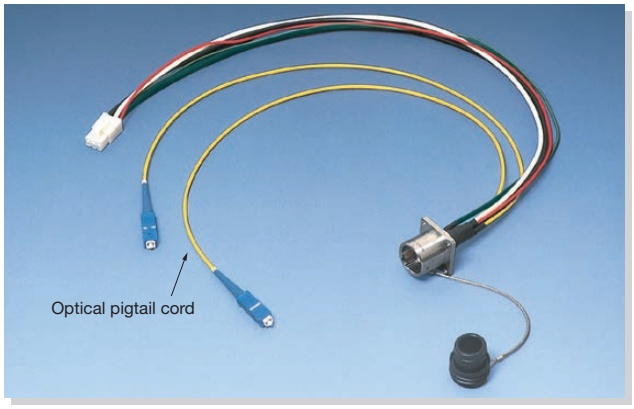

■ Dimensions

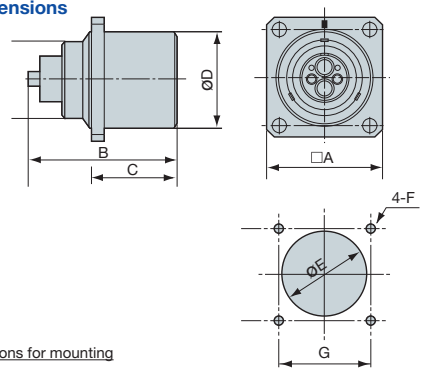

Dimensions for mounting

● OPS series
<Type: OPS-R/##/**>**

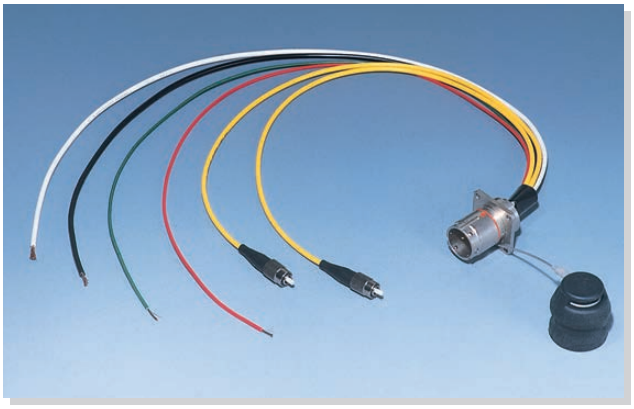

■ Dimensions

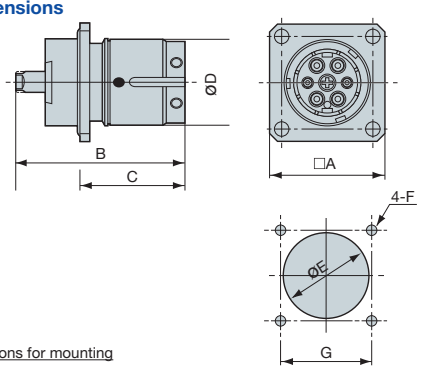

Dimensions for mounting

■ Connector dimensions and Mounting dimensions

● TV camera connector

Product number	Optical pin count	Electric pin count	A (mm)	B (mm)	C (mm)	D (mm)	E (mm)	F	G (mm)	Remarks
EDW-SUS	2	4	29.0	37.5	22.5	23.0	18.2	M3	23.0	3K series, stainless steel
OPS-R	2	4	29.0	42.4	26.5	21.3	21.7	M3	23.0	OPS2402-R

Note: When ordering, specify the following in the type number.
: Type of connector for optical pigtail fiber or cord, such as FC, SC or NN (for cord only).
**** : Length of optical pigtail fiber or cord in millimeter, like 0500 for 500 mm.

3K and 5K series are products of LEMO S.A. in Switzerland; and OPS series are products of TAJIMI ELECTRONICS CO., LTD. in Japan.

Plug Receptacle

Description

These connectors are to be placed on the base station side of the cable seen from the camera head. It should be noted that every series of connectors are not compatible with each other. Receptacle and plug connectors mate with each other as a pair.

● 3K series (ARIB and SMPTE standards)
<Type: FXW-SUS/##/**>**

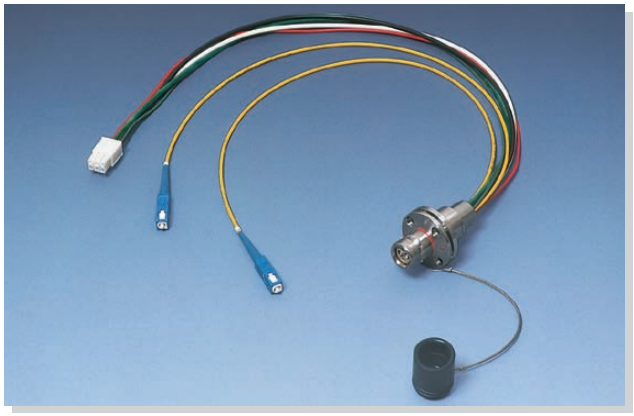

■ Dimensions

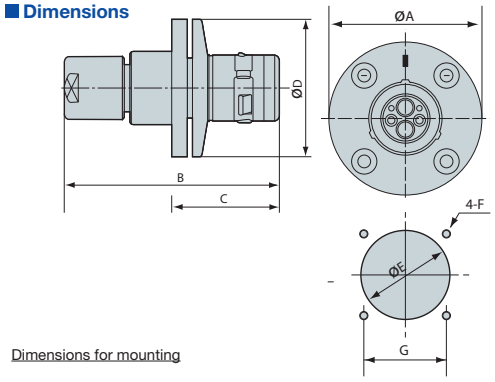

Dimensions for mounting

● OPS series
<Type: OPS-PR/##/**>**

■ Dimensions

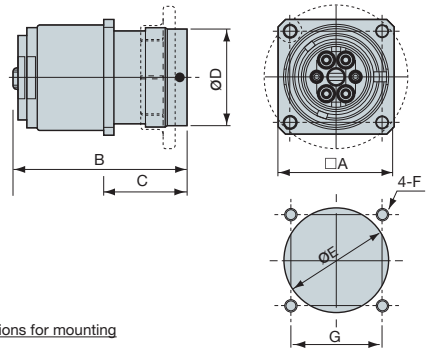

Dimensions for mounting

■ Connector dimensions and Mounting dimensions

● TV camera connector

Product number	Optical pin count	Electric pin count	A (mm)	B (mm)	C (mm)	D (mm)	E (mm)	F	G (mm)	Remarks
FXW-SUS	2	4	38.0	60.0	30.0	38.0	23.0	M3	20.6	3K series, stainless steel
OPS-PR	2	4	29.0	43.9	21.0	24.0	26.4	M3	23.0	OPS2404-PR

Note: When ordering, specify the following in the type number.
: Type of connector for optical pigtail fiber or cord, such as FC, SC or NN (for cord only).
**** : Length of optical pigtail fiber or cord in millimeter, like 0500 for 500 mm.

Optical Composite Cable for TV Camera (For Fixed Cabling)

Type: TV-SM-LSZH

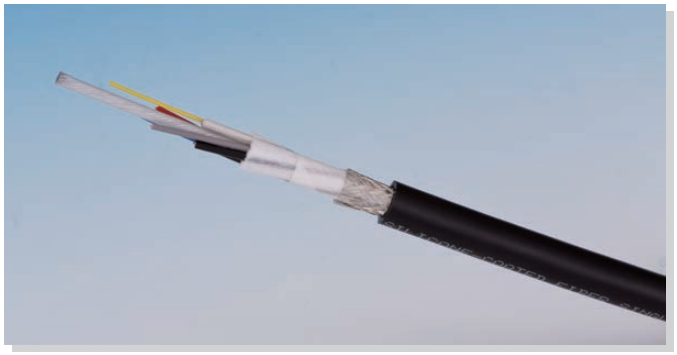

Description

This composite cable integrates power line for TV camera, control line, and optical fiber for video and audio transmission. For fixed cabling applications, the cable is available: low-smoke emission, halogen-free, fire-resistant grade.

Specifications

●Structure

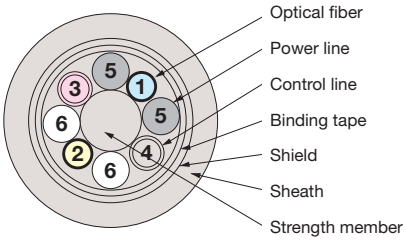

TV-SM-LSZH

● Optical fiber

Item	Condition	Characteristics	Conversion	
			Condition (km)	Formula
Transmission loss	λ=1.31 μm	0.5 dB/km≥	L ≥ 0.4	0.5 x L dB≥
			L < 0.4	0.5 x 0.4 dB≥

Item	Description
Type of fiber	Single-mode fiber
Mode field diameter	9.0 ± 1 μm
Clad diameter	125 ± 1 μm
Amount of eccentricity	1 μm or less
Cutoff wavelength	1.10~1.35 μm
Coated outside diameter	0.9 ± 0.1 mm

● Power line

Item	Characteristics
Conductor resistance	37.5 Ω/km
Insulation resistance	10,000 MΩ·km
Withstand voltage	AC1,750 V/1 min.

● Control line

Item	Characteristics
Conductor resistance	113 Ω/km
Insulation resistance	10,000 MΩ·km
Withstand voltage	AC1,750 V/1 min.

Core number	Core name	Core color
1	Optical fiber	Blue
2		Yellow
3	Control line	Red
4		Gray
5	Power line	Black
6		White

● Cable (integrated)

Item \ Type		TV-SM-LSZH
Optical fiber core		See Table on the left
Power line	Conductor	Tin-plated soft copper wire strand (21 wire/0.18 mm)
	Insulation thickness	0.4 mm nominal
Control line	Conductor	Tin-plated soft copper wire strand (7 wire /0.203 mm)
	Insulation thickness	0.33 mm nominal
Strength member		Steel wire: 1.8 mm Sheath outside diameter: 2.5 mm
Core stranding		Two cores of optical fiber, four cores of power line and two cores of control line are stranded around a strength member
Shield		Tin-plated soft copper wire braid
Sheath (Pb-free)		Low smoke-emission, halogen-free, flame-resistant
Finished outside diameter		9.2 ± 0.3 mm nominal
Approximate mass		120 kg/km nominal

● Mechanical characteristics

Item	Characteristics
Allowable tension	700 N
Allowable bending radius	Six times the cable outside diameter or larger

Panel-Integrated FOP Unit

Description

The connector panel and termination box are integrated to create this compact unit. With all optical cords equal in length, workability is improved and installation methods can be unified without much concern over the terminal board size during design. Moreover, optical cords can be handled without fear of damage when the panel is removed for maintenance.

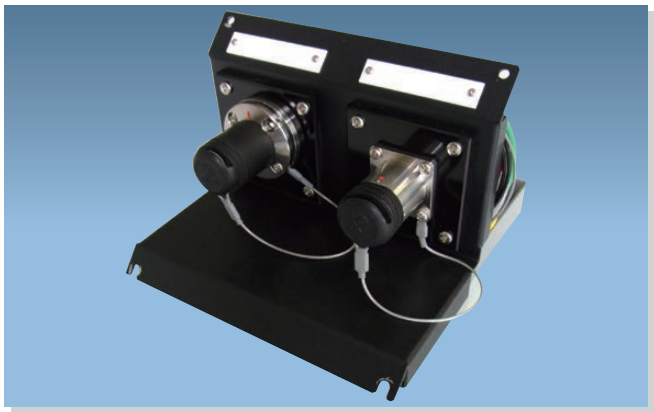

● FOP Unit

Category	No. of cable	Type number	Dimensions (mm)		
			A (height)	B (width)	C (depth)
2U	1	2U-FOP1/＊＊＊/N	88	142	170
	2	2U-FOP2/＊＊＊/N	88	142	170
3U	1	FOP1/＊＊＊/N	132.6	142	110
	2	FOP2/＊＊＊/N	132.6	142	110

Frame and connector sold separately.
Please specify the frame of the FOP panel.

FOP2 / ＊＊＊ / N
Code type

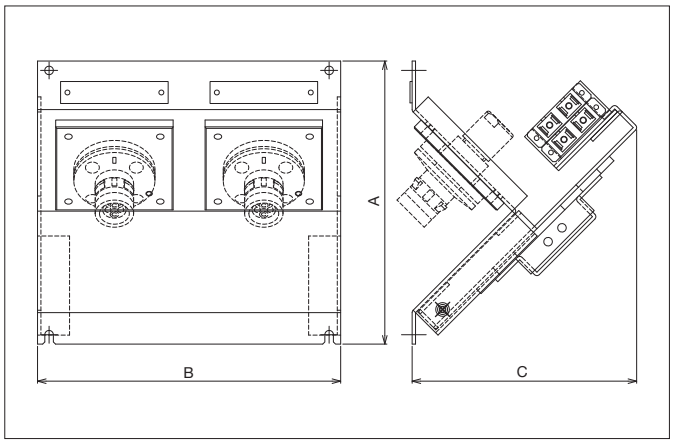

Cable type

Connector maker	Connector type	Code type
3K series	PBW-SUS	LPJ
	FMW-SUS	LPP
OPS series	OPS2405-PJ	SPJ
	OPS2406-PP	SPP

Example: FOP2/LPJ/N
Code type specified in the table.

Receptacle type

Connector maker	Connector type	Code type	Accessories (PCS)		Metal connector		SC adaptor (DCS)	Groundwire*2 (mm)
			SC cord *1,*2	Splicing sleeve	Housing	Contact set		
3K series	EDW-SUS	LR	1	3	1 pair	5	1	15
	FXW-SUS	LPR	2	6	2 pair	10	2	35
OPS series	OPS2402-R	SR	1	3	1 pair	5	1	15
	OPS2404-PR	SPR	2	6	2 pair	10	2	35

Note: *1 Applicable to optical fiber with maximized bendability of 15-mm radius. *2 Fire-resistant polyethylene sheath (Eco product)

Example: FOP2/LR/N
Code type specified in the table.

Panel-Integrated FOP Unit, Mounting Frame and Related Member

● FOP-P (Wall mount type Frame)

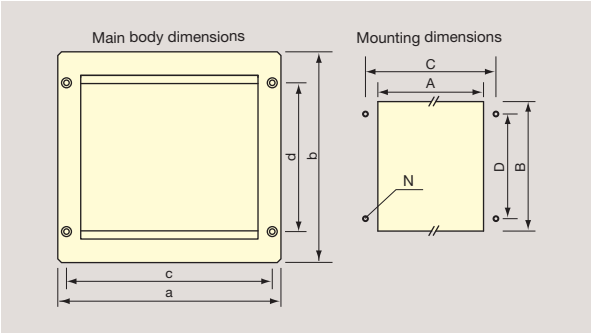

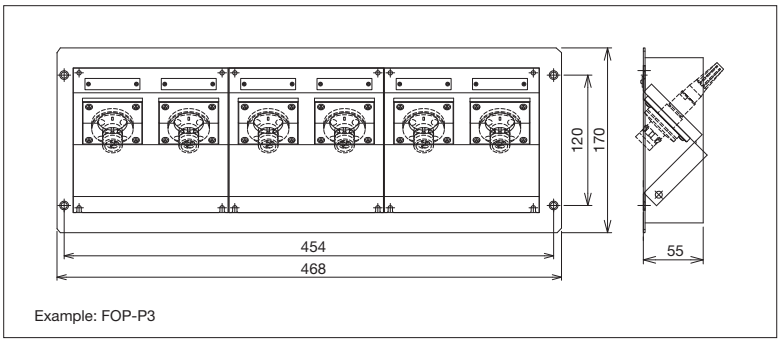

Example: FOP-P3

Unit: mm

Type number	Mainbody dimensions				Mounting dimensions				N
	a	b	c	d	A	B	C	D	
FOP-P1	180	170	166	120	150	156	166	120	M4
FOP-P2	325	170	312	120	296	156	312	120	M4
FOP-P3	468	170	454	120	438	156	454	120	M4
FOP-P1/2U	180	126	166	80	150	110	166	80	M4
FOP-P2/2U	322	126	312	80	296	110	312	80	M4
FOP-P3/2U	468	126	454	80	438	110	454	80	M4

Example: FOP-P3

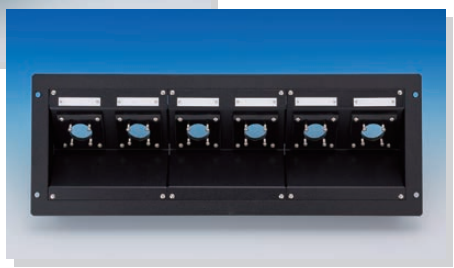

● FOP-RP (Rack mount type Frame)

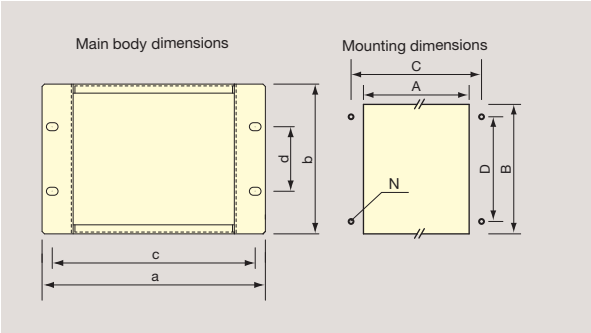

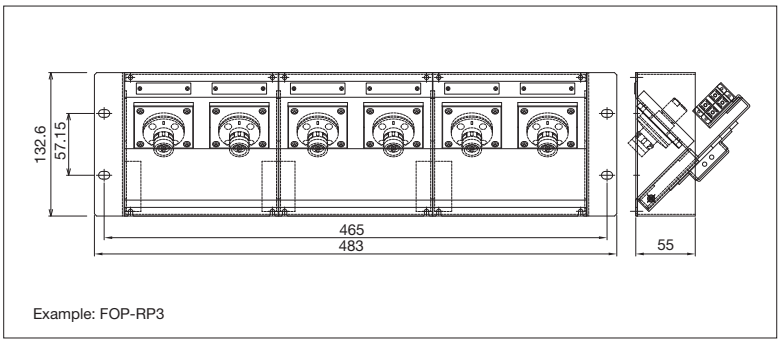

Example: FOP-RP3

Unit: mm

Type number	Mainbody dimensions				Mounting dimensions				N
	a	b	c	d	A	B	C	D	
FOP-RP3	483	132.6	EIA standard size						M5
FOP-RP3/2U	483	88							M5

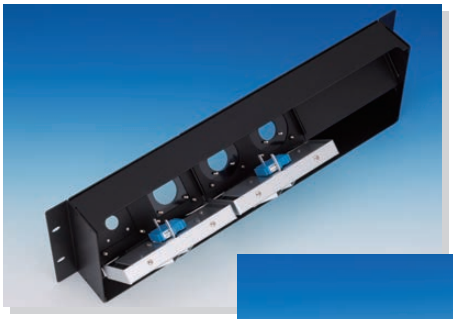

Example: FOP-RP3

Panel-Integrated FOP Unit, Mounting Frame and Related Member

● **Blank Panel**

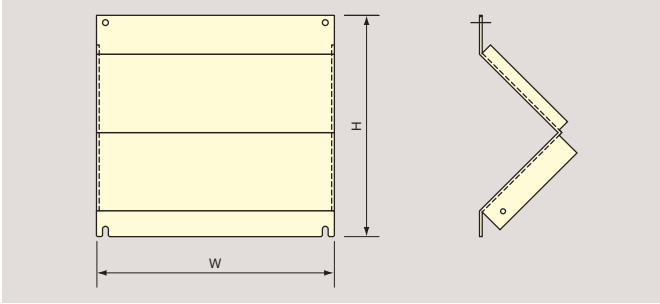

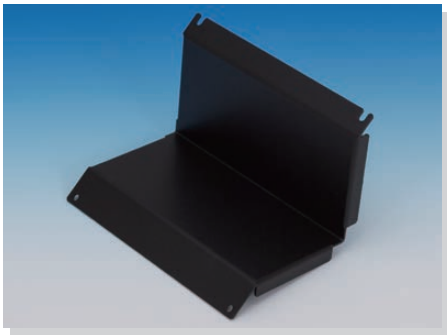

Type number	W (mm)	H (mm)
2U FOP-BP	142	88.0
FOP-BP	142	132.6

FOP Unit with Circuit Breaker

Features

- Surge protection circuit has been combined with the panel-integrated optical joint box, i.e. FOP unit, with a size increase of only 15 mm in the depth.
- Peak surge voltage is suppressed by about half, and the total energy, i.e. voltage multiplied by time, down to 0.1 msec after the outbreak of a surge is reduced by a factor of 7 to 10.
- By manipulating a switch on the panel, the surge ingress circuit is cut off electrically.
  Evaluation method: Corresponding to the level 4, i.e. 4 kV x 1.2/50 μsec by IEC61000-4-5 (Surge immunity test)

● **Applied waveform**

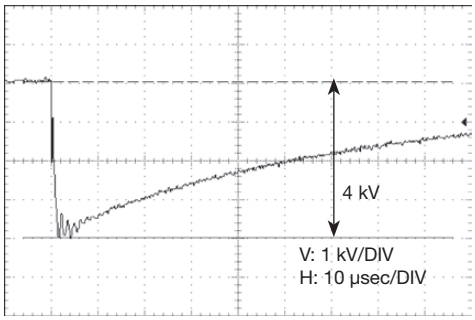

● **Output waveform**

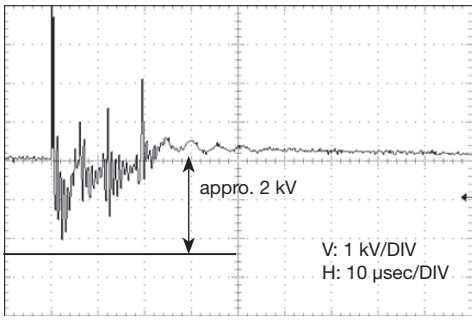

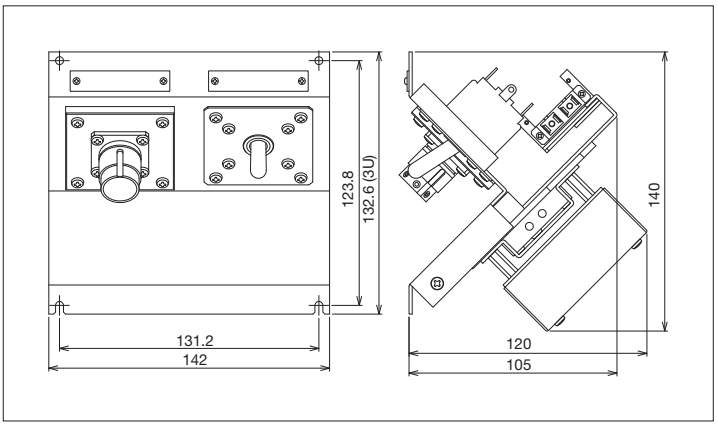

1 What is the optical fiber with maximized bendability ?

This is a novel optical fiber developed by Furukawa Electric which permits flexible optical wiring.

- The allowable bending radius for the fiber is 15 mm, one half the conventional values.
- The fiber can be jointed with conventional single-mode fibers.
- The fiber is in compliance with ITU-T G.652 B standard.
- The fiber can be used at a wavelength band of 1280~1625 nm.

2 What is single-mode fiber (SM) or multi-mode (GI) fiber?

- Graded-index fiber, GI fiber
  In graded-index fiber, the refraction index in the core is graded to gradually increase farther to the center. Thus, the refractive index at the axis is higher slowing the speed of light rays, while that near the cladding is lower increasing the light speed. Because light speed is inversely proportional to refractive index, this reduces the arrival time disparity to have all modes (light rays (1), (2) and (3) in the Figure) arrive at about the same time, resulting in improved transmission characteristics or transmission bandwidth. Fibers with a core diameter of 50 μm or 62.5 μm are widely used at a transmission wavelength of
  0.85 μm or 1.3 μm.

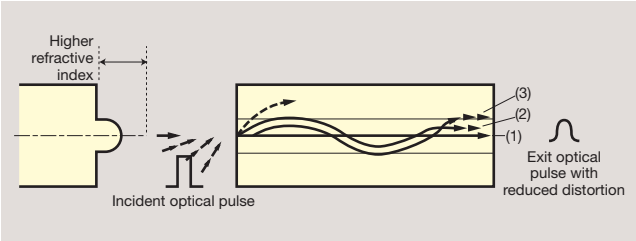

- Single-mode fiber, SM fiber
  Whereas multi-mode fiber supports many modes within its core, fiber with a much reduced core diameter of, say 10 μm, can support only the fundamental mode of propagation as shown in the Figure. There is no waveform distortion due to arrival time disparity because only one mode propagates along the fiber. This type of fiber is called single-mode fiber, and its refractive index distribution is generally step-like. Single-mode fiber is suited for high-speed, high-capacity transmission systems because of its superior transmission characteristics, and is used at a wavelength of
  1.31 μm or 1.55 μm, at the former of which ordinary silica fibers have zero chromatic dispersion.

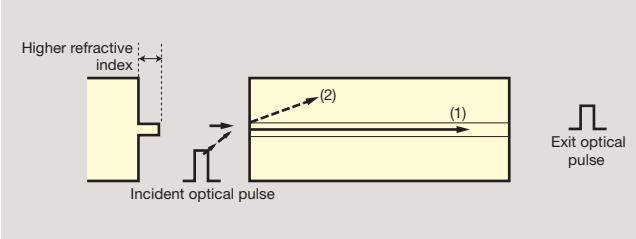

3 What is transmission bandwidth?

In designing optical fiber communication systems, amplitude response in the baseband is used. Transmission bandwidth refers to a modulation frequency fb, at which the baseband amplitude response expressed as log|H(fb)| equals -6 (dB). Thus, it gives a rough estimate of up to which frequency the signals are transmitted without being distorted.

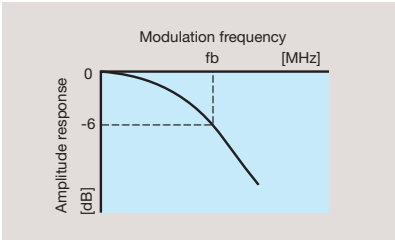

4 What is transmission loss?

Taking two points Z1 and Z2 along an optical fiber (Z2 > Z1) and letting the magnitudes of optical intensity at these points be P1 (Z1) and P2 (Z2), respectively, the transmission loss in this section can be expressed as α= -log (P2/P1) (dB). Thus, it corresponds to the ratio of optical energy being transmitted at these points. The transmission loss of an optical fiber comprises absorption loss that turns into heat and scattering loss or radiation loss that leaks out of fiber, and therefore, it depends on the wavelength and spectrum of light source, incident mode distribution and so forth.

5 What is cutoff wavelength?

Cutoff wavelength of a single-mode fiber is the wavelength above which the fiber supports and propagates only one mode of light. The cutoff wavelength is dependent on the fiber structure such as refractive index distribution within the core, core dimension and the like.

6 What if a heavy load falls onto the optical cable?

The results will depend on what structure the cable you stepped on has. As for the cables of the Company, increase in transmission loss generally appears at approximately 10,000 N as illustrated in the Figure. But loss increase can appear at around 5,000 N depending on the structural design or material selection.

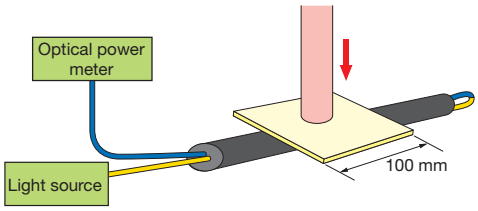

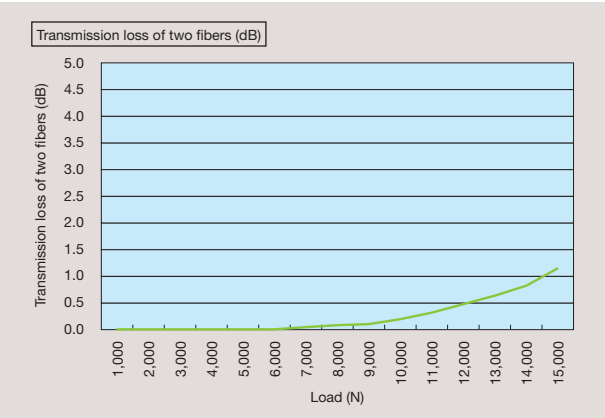

7 To what degree of bending can an optical cable resist for light transmission?

The Figure shows the performance of our cable using the new optical fiber with maximized bendability in comparison with that of conventional ones.

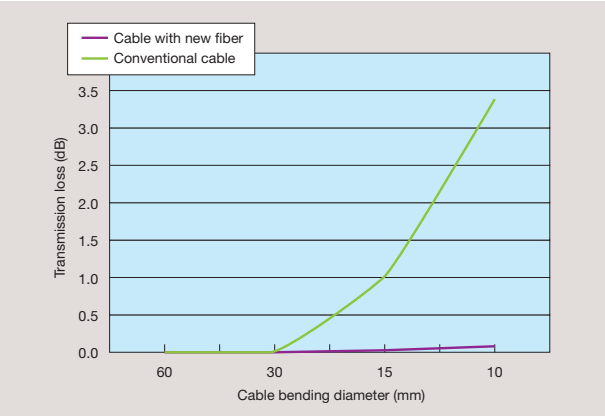

Flowchart from Cable Installation to Completion of Jointing

■ Cable route confirmation

- Does the route have bending?
- What about cable installation conditions such as piping, ladder and rack?
- Is the distance to power lines sufficient?
- Is there no fear of submersion?
- Is there any possible influence of small animals including rat?

■ Specification of terminal board

- What is the size of terminal board? Where is the termination box to be placed?
- What would be the entry route of the cable into the terminal board?
- Is there any coexistence of other cables?
- Does the board have door? What would be the situation when in operation?
- What is the height of the terminal board from the floor?
- Is connector guide bar necessary?

■ Installation

- Is the cable surplus length sufficient for maintenance?
- Can the cable be accommodated without any twist or tight bending?
- Is the metal cable securely terminated without any loosening or misalignment?
- Have the optical fiber fusion splicing procedures been securely carried out?

■ Inspection

Conduction test

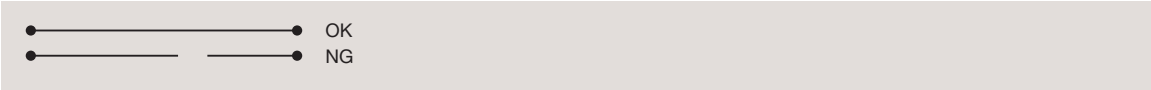

Crossed line test

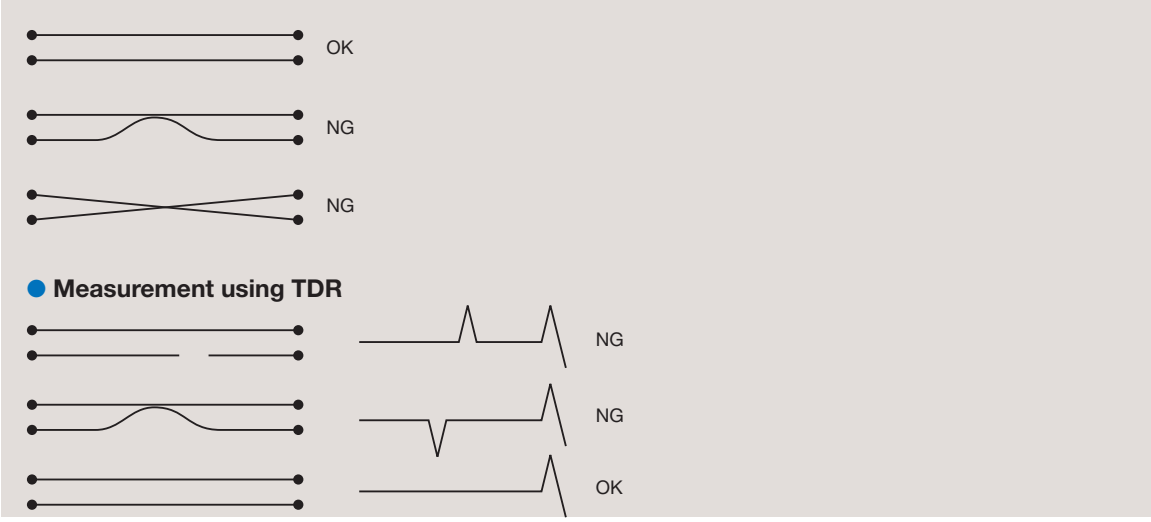

Withstand voltage test

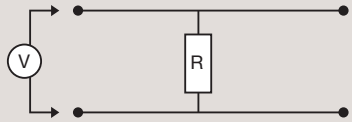

The closer is R to infinity, the better.

If not OK, i.e. insufficiently insulated:

- It is likely that water has seeped into the cable.
- It is likely that the cable is collapsed.
- It is likely that water or electrically conductive substance has entered into the cable.
- Some other reasons.

Optical transmission loss

● Optical power meter method

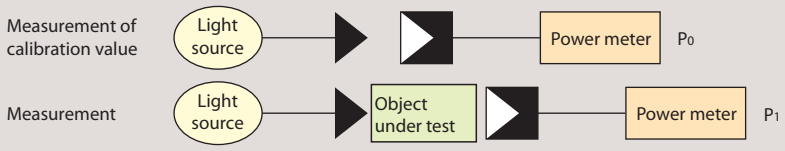

Optical transmission loss of the object under test is $|P_0-P_1|$.

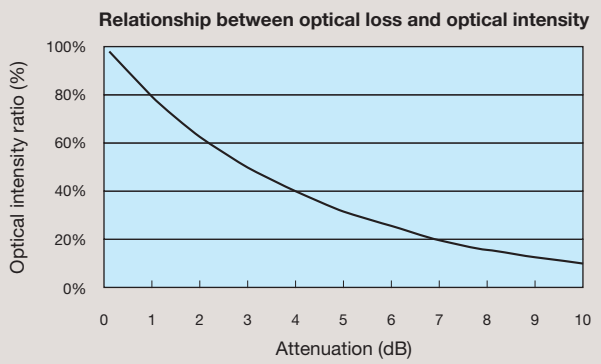

● Optical Time Domain Reflectometer (OTDR) method

1. Principle

When an optical pulse is input at one end of an optical fiber, the pulse propagates along the fiber with its intensity being attenuated due to the radiation and absorption losses. On the other hand, small portions of the light pulse are reflected by such causes as Rayleigh scattering, fiber fracture and the mirror surface at the output end of the fiber, propagating back to the input end in succession. These reflected pulses represent, when accumulated over time and displayed on a screen with respect to fiber length, a waveform from which useful information on the fiber is obtained including splicing loss, transmission loss, line length and fault location.

2. Measurement example

An example of line measurement is shown in the Figure.

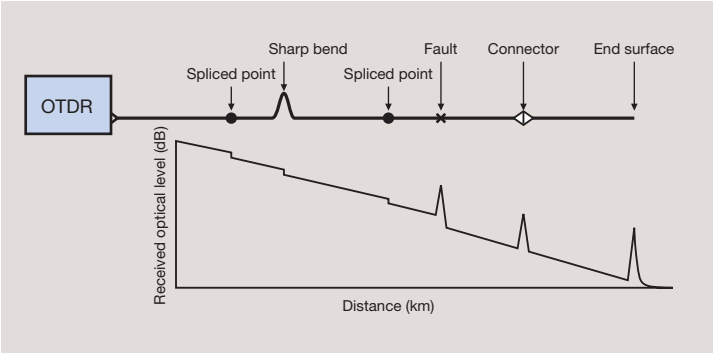

Note

Note

Furukawa group's Distributor

Furukawa Sangyo Kaisha, Ltd. (FSK Japan Headquarters)
21-3-4, Shimbashi Minatoku, Tokyo 105-8630 Japan
Tel: +81-3-5405-7590 Fax: +81-3-5405-7716 http://www.furusan.co.jp/english/

Furukawa Sangyo Shanghai Co., Ltd.
RM.18c Jiu Shi Fu Xing Mansion, No.918, Huai Hai Zhong Road, Shanghai
Tel: +86-21-6415-7294

Furukawa Sangyo Shanghai Co., Ltd. Beijing Representative Office
Room 27A, Citic Building, No.19 Jianguomenwai Street,Chaoyang District, Beijing, P.R.China 10004
Tel: +86-10-8526-1550 Fax: +86-10-8526-1552

Furukawa Sangyo Kaisha (H.K.) Ltd.
No.2809, 28/F, The Metropolis Tower, No.10, Metropolis Drive, Hunghom Kowloon, Hongkong
Tel: +852-2865-2128 Fax: +852-2861-0549

Furukawa Sangyo Kaisha (H.K.) Ltd. Taiwan Branch
Rm. 405, 4F., No. 131, Sec. 3, Minsheng E. Rd., Songshan Dist., Taipei City 10596, Taiwan (R.O.C.)
Tel: +886-2-2718-1328 Fax: +886-2-2718-8281

Furukawa Sangyo Korea Co., Ltd.
212 Kyeongin Ilbo B/D, 299, Hyowon-Ro, Paldal-Gu, Suwon-Si, Gyeonggi-Do, Korea
Tel: +82-31-898-7688 Fax: +82-31-898-7690

Furukawa Sangyo Kaisha (Malaysia) Sdn. Bhd.
1106, 11th Floor, Amcorp Tower A, Amcorp Trade Center,18 Jalan Persiaran Barat,
46050, Petaling Jaya,Selangor Darul Ehsan, Malaysia
Tel: +603-7957-7000

Furukawa Sangyo Kaisha India Pvt. Ltd. (FSKI)
6/F, Flat No.607, Global Foyer, Golf Course Road, Sector 43, Gurugram, Haryana- 122022, India
Tel: +91-124-4831-800 Fax: +91-11-4717-7113

Furukawa Sangyo Kaisha (Thailand) Ltd.
No.191 Silom Complex Building, 16th Floor, Unit 4, Silom Road, Kwaeng Silom, Khet Bangrak,
Bangkok 10500 Thailand.
Tel: +66-2-105-4051 Fax: +66-2632-1078

Furukawa Sangyo Kaisha Philippines, Inc.
Bldg. 5 & 6 Panorama Compound 5, Laguna Technopark Annex, Binan Laguna, Republic of the Philippines
Tel: +63-2571-2752 Fax: +63-2571-2701

Furukawa Sangyo North America, Inc. (FSNA)
1871 The Alameda, Suite350, San Jose, CA95126 United States of America
Tel: +1-408-496-0051 Fax: +1-408-496-0052

American Furukawa, Inc. (AFI)
47677 Galleon Drive, Plymouth, MI 48170 U.S.A.
Tel: +1-734-446-2200 Fax: +1-734-446-2260 http://www.furukawaamerica.com/

Furukawa Electric Europe Ltd. (FEEL)
Furukawa House, 77-85 Fulham Palace Road, London W6 8JD, United Kingdom
Tel: +44-20-7313-5300 Fax: +44-20-7313-5310 http://www.furukawa.co.uk/

P.T. Furukawa Electric Indonesia
Registration No:AHU-32328.AH.01.01.Tahun 2010 Sucaco Building, 6th Floor Jl. Kebon Sirih No.71, Jakarta-10340
Tel: +62-21-3190-6212 Fax: +62-21-3190-6407

Produced by

FURUKAWA ELECTRIC INDUSTRIAL CABLE CO., LTD. https://www.feic.co.jp/en/

Headquarters
6-48-10 Higashi-Nippori, Arakawa-ku, Tokyo 116-0014, Japan
Tel: +81-3-3803-1151 Fax: +81-3-3801-0581

Hiratsuka Works
5-1-9 Higashi-Yawata, Hiratsuka, Kanagawa, 254-0016, Japan
Tel: +81-463-21-8290 Fax: +81-463-21-8292

DE-057 2111 TR50